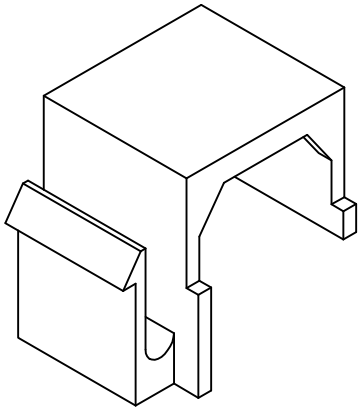

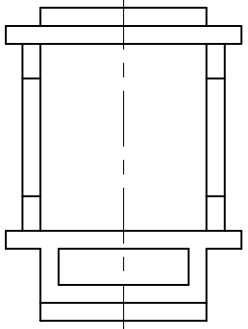

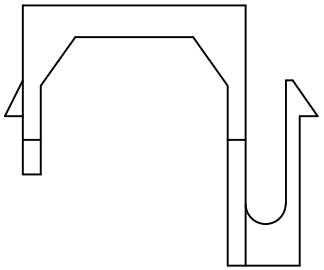

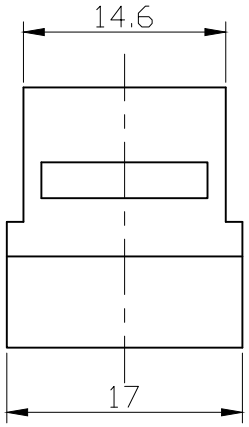

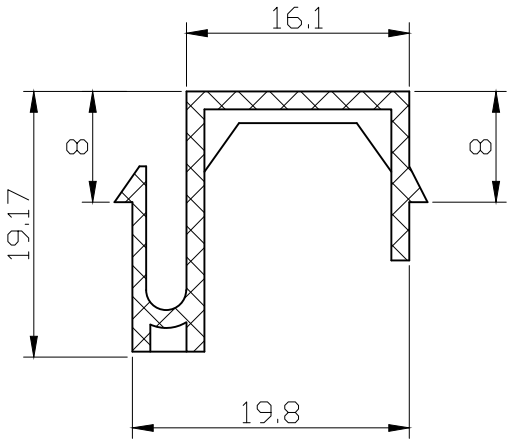

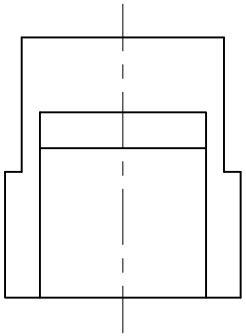

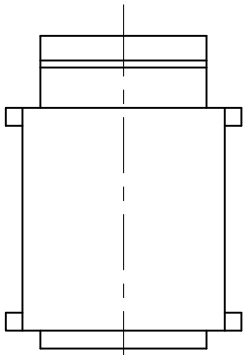

MATERIALS:ABS
COLOUR: WHITE

REV.	DESCRIPTION	DATE

Tolerance: X. ±0.5 .X ±0.3 .XX ±0.10	SCALE: FREE	CUSTOMER:	Approved by
Angle: X° ±3° .X° ±1°	UNIT: mm	CUSTOMER P/N: / COMPANY P/N: KYJ-BLANCO	Checked by
	REV.: 00	DWG. No.: / TITLE: FACEPLATE BLANK INSERT	Design by XJH
		SHEET 1/1	